Getting Started using a Particle Photon

David Dixon
April 13, 2016

Objectives

- Learn to connect to, flash code to, read cloud data from, and perform other basic tasks with a small microcontroller (Particle Photon).
- Build a prototype for monitoring holding tank levels, using a variable resistor as a substitute for a pressure transducer

Why a breadboard?

- Easy, solderless connections to test circuit designs
- You will make mistakes, forget things, and realize that your initial design has “bugs”
- It's a lot easier to yank a wire out than it is to desolder.

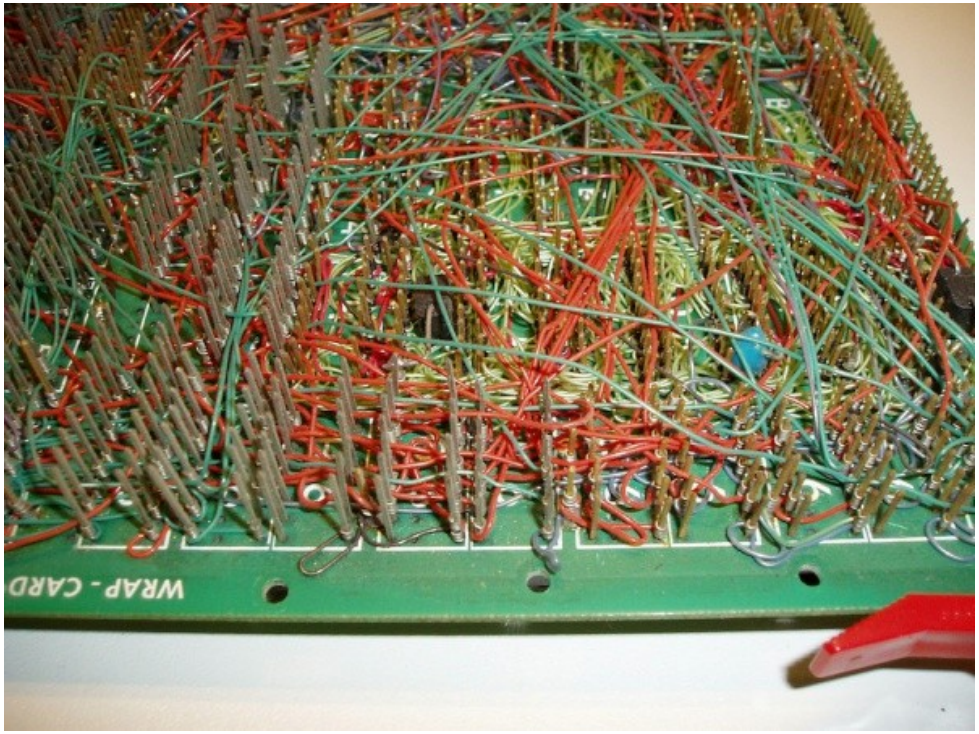

How to use a breadboard

- https://learn.sparkfun.com/tutorials/how-to-use-a-breadboard

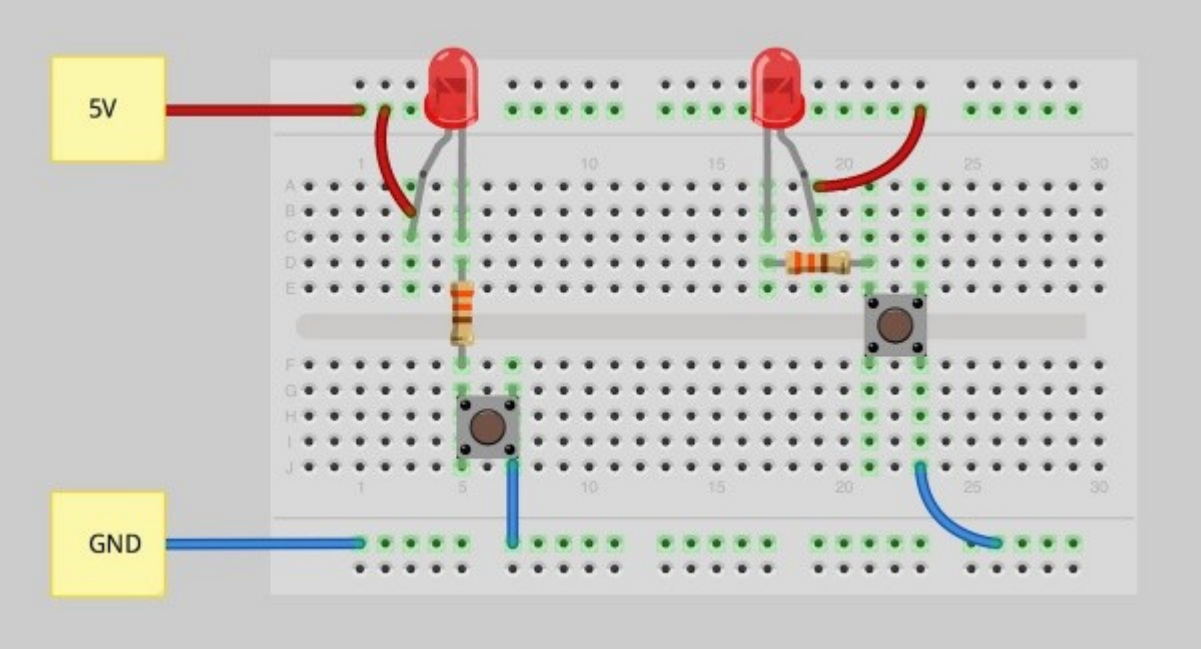

Installing Photon in Breadboard

- One row of pins on either side of center divider
- MicroUSB connector at end of board

- Power on and cross fingers that Photon “breathes” cyan.

Flashing Code to Photon

- Go to http://eastcoasthdtrally.com. There's a post at the top with a link labeled “Code” that has the firmware we're going to start with. Open this file.
- Open (preferably in another tab) http://build.particle.io. You'll need to log in, and should see an interface similar to the image on this slide

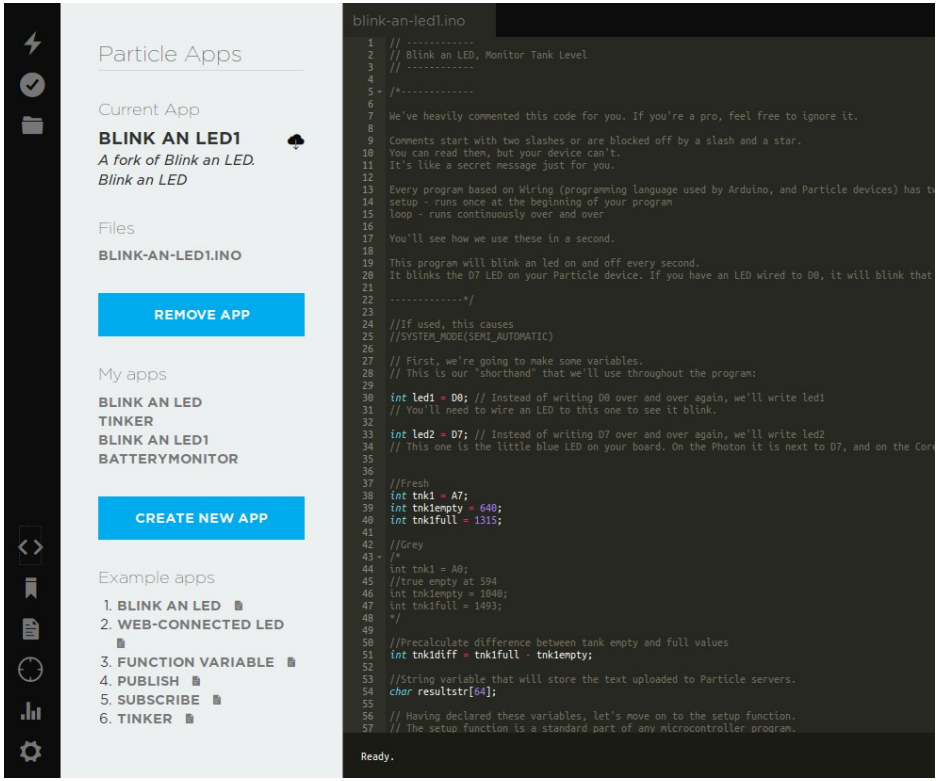

Installing Variable Resistor

- Resistor should be oriented so that each of the three pins land on different breadboard rows.
- Connect one of the outer pins to 3.3V power, the other to ground.
- Third pin goes to an analog input on the Photon (A7 for now)

Reading Data with Particle.Variable Method

- Replace 0s with your device ID, and 1s with your access token
- https://api.spark.io/v1/devices/0000000000000000000000000/result?access_token=1111111111111111111

Publishing Data

- Uncomment code block between lines 92 and 98
- Re-flash firmware
- Go to http://dashboard.particle.io and navigate t o logs